back

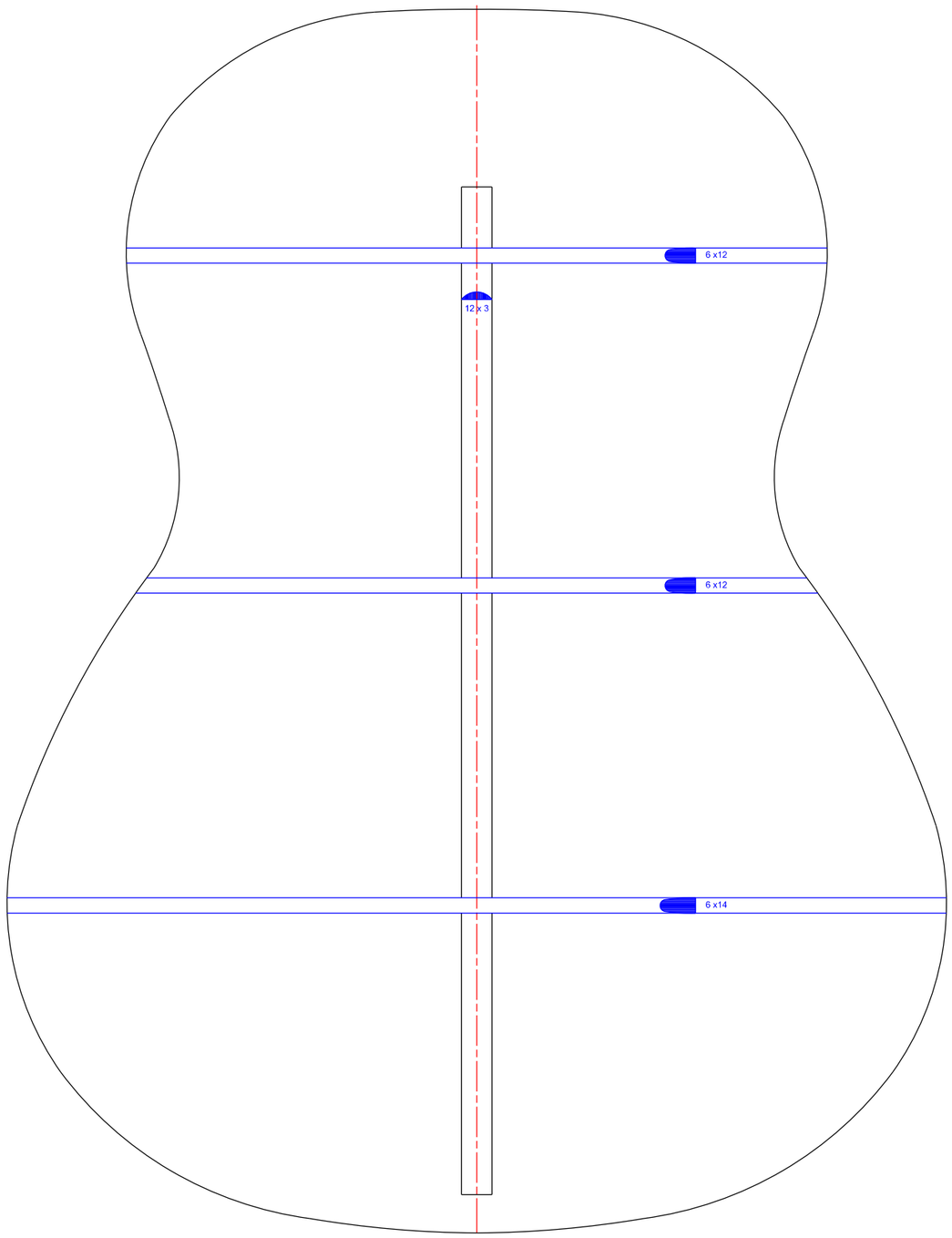

Soundboard

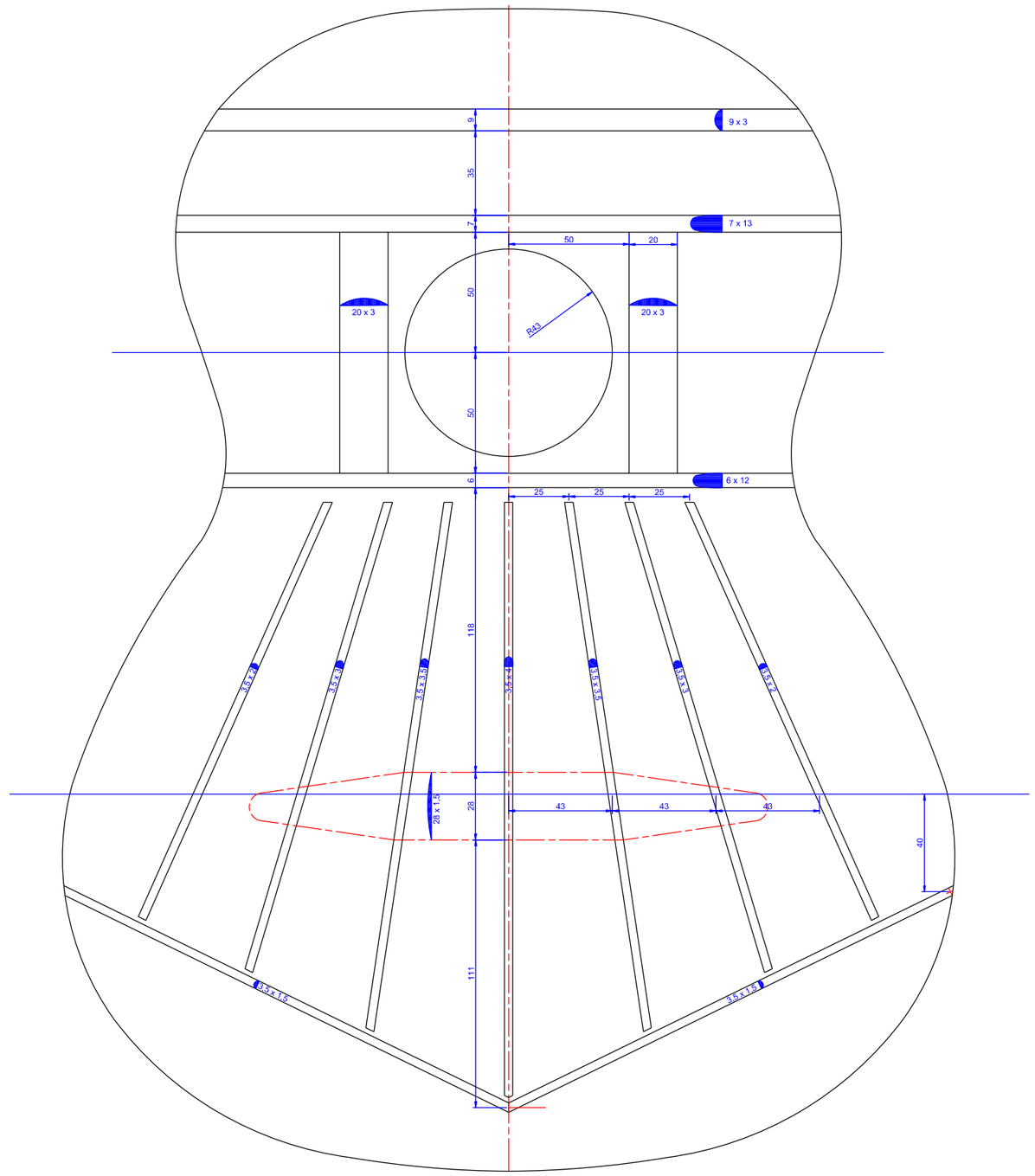

100 90 80 70 60 50 40 30 20 10 0 mm

copyright © Pablo Requena All Rights Reserved